LATHRUP INDUSTRIES, INC.

FOR APPROVAL ONLY!

SUBMITTED: _____

☐ APPROVED WITHOUT CHANGES

☐ APPROVED WITH CHANGES NOTED

☐ NOT APPROVED – RESUBMIT

BY: _____

DATE: _____

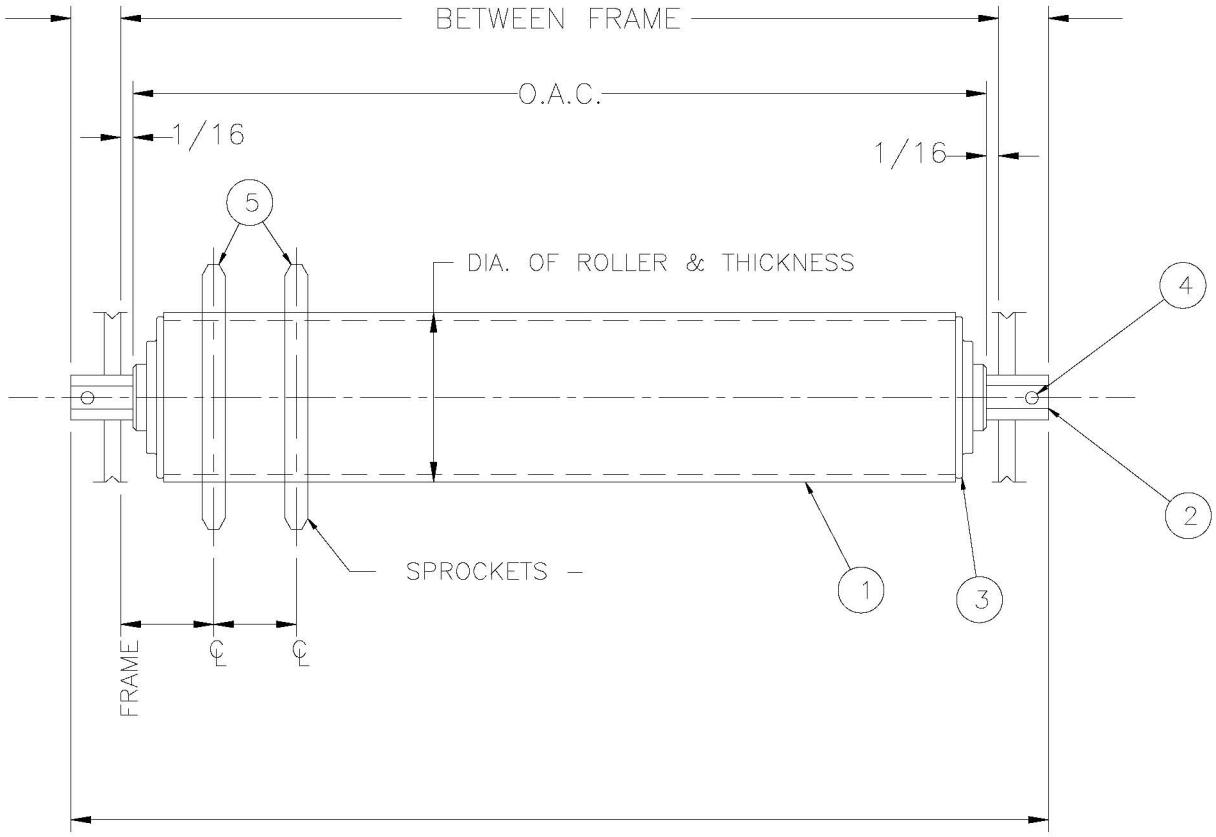

NOTE: MAX FRAME THICKNESS = 1/4"

DET.	QTY.	PART NUMBER	MATERIAL & DESCRIPTION
5	2		SPROCKET –
4	2		COTTER PIN
3	2		BEARING
2	1	STOCK	DIA. OF SHAFT
1	1	STOCK	DIA. ROLLER & THICKNESS

DESCRIPTION:

POWER ROLLER – BF – PIN RETAINED

SCALE:	ENGINEERED BY:	DRAWN BY:	DATE:
NONE			
ACAD .DWG:	ITEM NUMBER:	SHIP DATE:	JOB NUMBER:

(☐) REQD

COMPANY NAME:

LATHRUP INDUSTRIES INC.
42300 W. NINE MILE RD., NOVI, MI 48375
PH. (800) 536-3003/FAX (248) 349-1062

DRAWING NUMBER: